UniComfort

- Instructions manual

QUICK START

1. A reset procedure runs upon power **On** - the display flashes.
2. Push the **On/Off** button to turn on the left/right side of the control. Push and hold until the display turn to **On**. This puts the Control as a standard on the 10 day curve. After this the Control automaticly stops after 10 days.
   To see the temp according to the 10 day curve see bellow.
3. To change the day just push **On/Off** and adjust with arrows when **d01** is shown.

When running onprogam ”Curve” the display seqently shows A-Temp/Day in the display for 1 sec. see the green indicator.

4. To stop the program running on either Left or Right. Push and hold the **Off** button on the chosen side. **Off** will show on the display and the green indicator will flash on A-Temp.
5. Any changes made in the Menu will automatically be stored as default for the next power up.

CURVES:

Days	1	2	3	4	5	6	7
Temp°	35	34	33	32	30	28	26

Days	1	2	3	4	5	6	7	8	9	10
Temp°	35	34	33	32	31	30	29	28	27	26

Days	1	2	3	4	5	6	7	8	9	10	11	12	13	14
Temp°	35	34	33	32	31	30	29,5	29	28,5	28	27,5	27	26,5	26

Days	1	2	3	4	5	6	7	8	9	10	11	12	13	14	15	16	17	18	19	20	21
Temp°	35	34	33	32	31,5	31	30,5	30	29,5	29	28,5	28	27,5	27	26,5	26	25,5	25	25	25	25

*Look under **Menu** to learn how to change the curve.*

UniComfort
- Instructions manual

MENU

To enter the **Menu** - press and hold the **Menu** button for 2 sec.

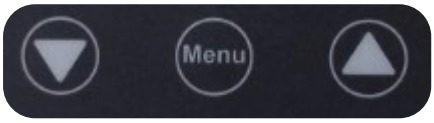

There are 4 Menu´s for each side. You will be asked to adjust left side and afterwords right side. Use the arrows.

			Led/Indicator
1. Curve selection	1.07 1.10 1.14 1.21	Select with arrows. Choose one of the 4 curves. Eighter 7, 10, 14 or 21 day curve.	Upon On/Off start On is shown in the display. Next A-Temp/S-Temp/Day will flash with 1 sec. interval.
2. Select Set temperature	2.20.... 2.38	Is changed with arrows (20°-38°). Do only select if a set temperature is desired.	Upon On/Off start On is shown in the display. Next A-Temp/S-Temp/Day will flash with 1 sec. interval.
3. Program selection	3.P1 3.P2	Change with arrows. P1 is set temperature and P2 is curve.	LED indicator will light green to indicate either for Set Temp or Curve for both left and right side.
4. Active Control	4.on 4.of	Change with arrows. It is possible to deactivate only one side. If one side has no piglets.	LED is inactive for the side that is turned off.

Go through the Menu´s 4 points, first the left side and afterwords the right side.
One push on the **Menu** button or 10 sec. inactivity will make you leave the the **Menu** and return to regular display.

You can make changes in the **Menu** regardles if the control is on **On** or **Off** - changes are stored upon change.

Press and hold **On/Off** button on both sides to shut down the control. Activate on a random button.

UniComfort
- Instructions manual

CONNECTIONS

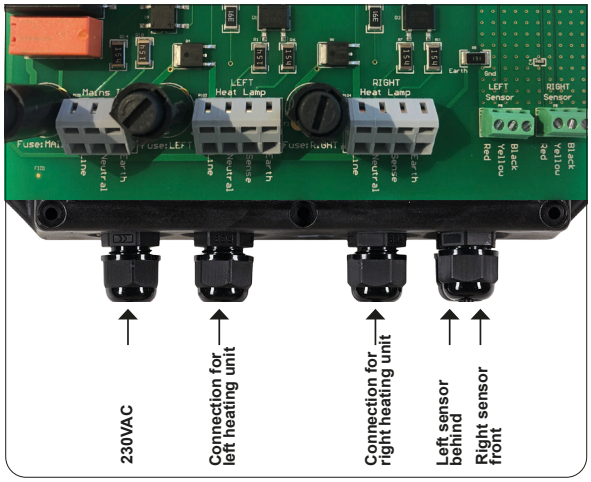

MOUNTING OF UNICOMFORT

Secure Unicomfort to a suitable surface using screws through the mounting holes on the sides of the unit.

Remove the displaypanel by uncrewing the 8 screws. Mount the wires in the clips on the print. Make sure to read the instructions on the mainboard. Make sure that left and right side cables are mounted correct on the board.

Attention: The heater must match the supply voltage to UniComfort

CONTROLPANEL

Left: Indicators show the current program for left and the reading on the left censor, aswell as the current Temperature and the day if Curveprogram.

Status: Green indicates that a UniHeater is correct connected to the control. Red indicates a problem with the UniHeater or connection to an unknown heatlamp or panel.

Menu: Arrow down and up.

Right: Indicators show the current program for right and the reading on the right censor, as well as the current temperature and the day if Curveprogram.

LED DISPLAY AND INDICATORS

A-Temp = Actual temperature

S-Temp = Desired temperature either form curve or from set temperature.

Day = Day on curve

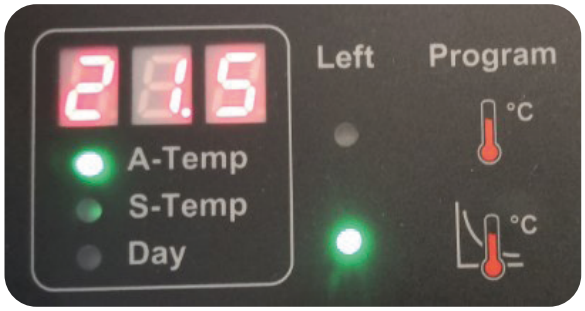

Program symbols

Set temperature

Curve control

UniComfort
- Instructions manual

ERRORS CODES/SAFETY/POWER FAILURE

On Power failure the Control will remember the last setting. The Control returns to the current day or set temperature.

The UniComfort autosaves the effect on the output every 2 end hour. Upon power failure it returns to the last saved effect.

The UniComfort runs a selftest upon start and during operation. Errors are shown in the display as different error codes.

Error code	Discription	Start/operation	Safety - Relay the control
EE1	Error Output	OPERATION	If temperature exceeds 40 C° for 15 min. while no power is supplied. Status LED will flash red.
If temperature exceed 40 C° LED will flash RED. After 3 minutes power output will reduce to 5% and increase slow			
EE3	Error Temp censor	START	
EE4	Error Temp censor	OPERATION	Error will erase unless the sensor cannot be read 4 times in a row. If the error do not delete on its own, check sensor cable. Persistent error EE4 indicate error / broken sensor cable.

To delete error codes or to reboot the control. Press and hold both arrow buttons at the same time. If the error does not delete - check all cables.

TECHNICAL INFORMATION

Product	UniComfort II Temperature control
Power	110VAC - 146W, 1.33A. 230VAC - 165W, 0.75A
Max effect	300W
Max effect pr. canal	150W
Fuse Right - Left	1.6A
Fuse MAIN	250 mA

Unitron a/s

Kokmose 6 DK-6000 Kolding Tlf. +45 75 80 21 22 mail@unitron.dk www.unitron.dk